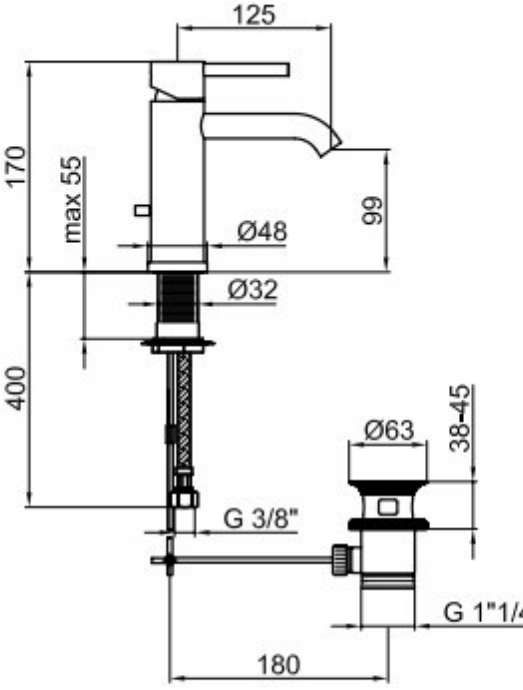

flex
AC0447

AC0469000

Ø 35 mm
AC0977000